TECHNICAL BULLETIN

No. 1 of 2022 – Modified **CCH**® Elite Control and Junction Boxes

Background

As part of the continuing effort to improve our products, we have incorporated major upgrades into the design of the **CCH**® Elite control boxes. To facilitate easier installation and maintenance of the feeder in the field, modifications have been made to the control box and feeder junction box wiring. Additionally, the control box modifications improved the overall build quality of the feeder assembly.

Problems Identified

- Current control box is hard wired directly to the junction box located on the front of the hopper using a 6-wire gray cable
- Supplementary wiring of the control box and junction box is performed by a 3rd party supplier prior to packaging and shipping of the feeder to the customer. This increases the level of quality checks required for possible missteps.
    - Components that require additional wiring into the feeder junction box and control box includes the feed and wash solenoid valves, high level switch, and flow switch

Solutions

- Redesigned control box and junction box feeder cable with a 4-wire waterproof connector
    - Control Box feeder connector cable length: 1 ft [3 m]
    - Junction Box feeder cable length: 9 ft [2.7 m]
- Control box and junction box come fully pre-wired, tested, and certified operational from the manufacture, except for the feeder high level switch
- The high-level switch is the only wiring required from our 3rd party supplier, mitigating confusion and errors from multiple component wiring
- Feeder junction box cable is pre-installed through the back of the feeder hopper for a ready to go connection with the control box cable in the field
- The main control box is now completely separated from the junction box
- A part number is created for the junction box for procurement of either the control box or junction box separately

Solenis • 2475 Pinnacle Drive • Wilmington, DE 19803 • 1-800-478-5727 • www.cchpoolcare.com

All trademarks belong to Solenis or its affiliates or to their respective third party owners. Review and follow all product safety instructions. All product information corresponds to Solenis' knowledge on the subject at the date of publication, but Solenis makes no warranty as to its accuracy or completeness and assumes no obligation to update it. Product information is intended for use by recipients experienced and knowledgeable in the field, who are capable of and responsible for independently determining the suitability thereof for intended uses and to ensure their compliance with applicable law. Proper use of this information is the sole responsibility of the recipient. Information provided by Solenis is not intended and should not be construed as a license to operate under or a recommendation to infringe any patent or other intellectual property right. No claims are made herein for any specific intermediate or end-use application. ©2022 Solenis

New Field Installation Instructions

Connect the Control Box to the Feeder

1. Connect the feeder control cable on the control box (second from the left) to the main cable coming out of the back of the feeder hopper
2. Orient the notch of both connectors so they can be pushed in together. The 4 pin connectors from the control box and the feeder are keyed so they fit together in only one orientation.
3. Once mated, turn the locking ring clockwise until hand tight. (The connectors are sealed to IP68 when mated correctly.)

Solenis • 2475 Pinnacle Drive • Wilmington, DE 19803 • 1-800-478-5727 • www.cchpoolcare.com

All trademarks belong to Solenis or its affiliates or to their respective third party owners. Review and follow all product safety instructions. All product information corresponds to Solenis' knowledge on the subject at the date of publication, but Solenis makes no warranty as to its accuracy or completeness and assumes no obligation to update it. Product information is intended for use by recipients experienced and knowledgeable in the field, who are capable of and responsible for independently determining the suitability thereof for intended uses and to ensure their compliance with applicable law. Proper use of this information is the sole responsibility of the recipient. Information provided by Solenis is not intended and should not be construed as a license to operate under or a recommendation to infringe any patent or other intellectual property right. No claims are made herein for any specific intermediate or end-use application. ©2022 Solenis

New Control Box and Feeder Cable View and Parts List

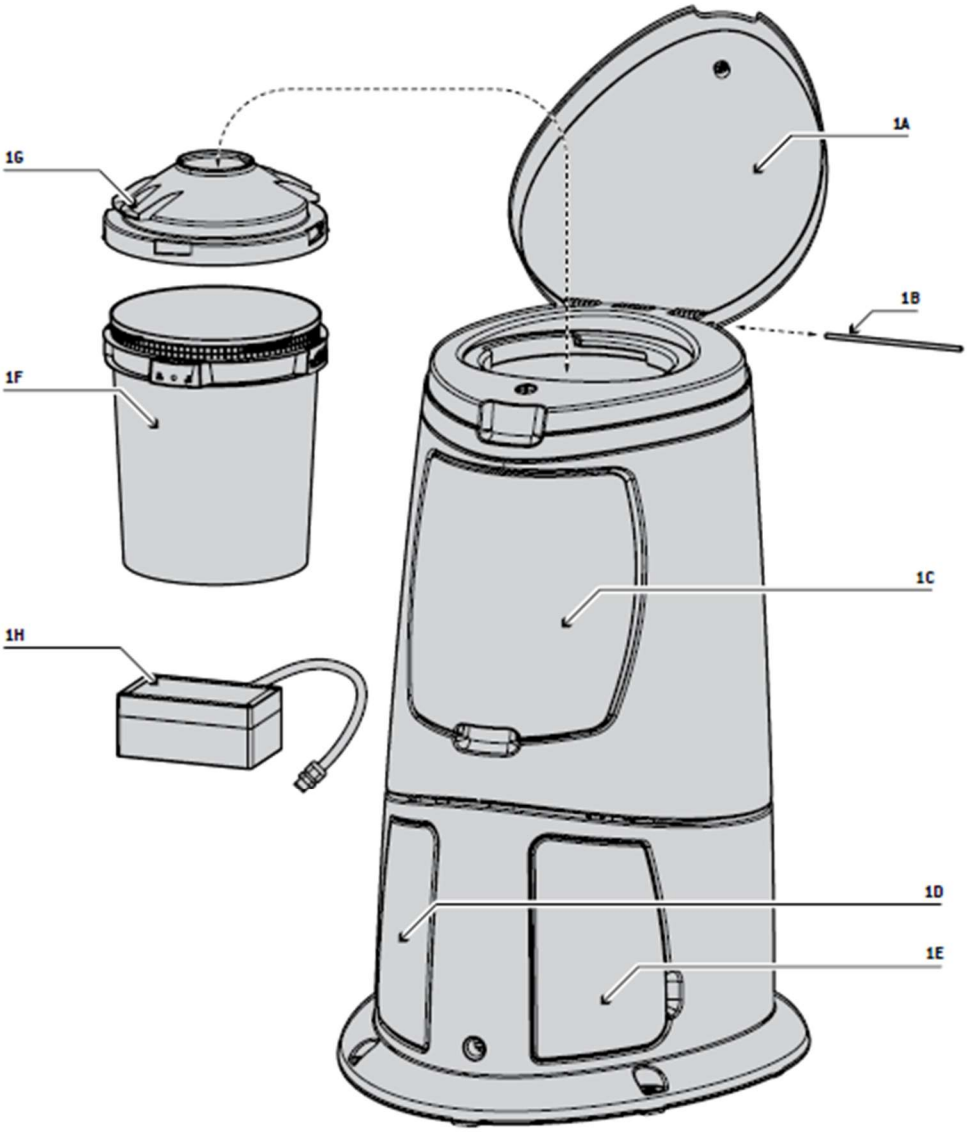

No	Description	Part Number
1: HOPPER AND BASE EXTERIOR COMPONENTS (if applicable, use both part numbers when placing order)		
1A	CCH® Lid / Lid label	73415
1B	Hinge Pin and Retainer Clip	N/A
1C	CCH® Front Cover / Cover Label	73416
1D	Left Cover	73233
1E	Right Cover	73235
1F	Bucket - 50 lbs CCH Tablets	23215
1G	Bucket Funnel	73216
1H	CCH® Control Box / Control Box Label	73417

Solenis • 2475 Pinnacle Drive • Wilmington, DE 19803 • 1-800-478-5727 • www.cchpoolcare.com

All trademarks belong to Solenis or its affiliates or to their respective third party owners. Review and follow all product safety instructions. All product information corresponds to Solenis' knowledge on the subject at the date of publication, but Solenis makes no warranty as to its accuracy or completeness and assumes no obligation to update it. Product information is intended for use by recipients experienced and knowledgeable in the field, who are capable of and responsible for independently determining the suitability thereof for intended uses and to ensure their compliance with applicable law. Proper use of this information is the sole responsibility of the recipient. Information provided by Solenis is not intended and should not be construed as a license to operate under or a recommendation to infringe any patent or other intellectual property right. No claims are made herein for any specific intermediate or end-use application. ©2022 Solenis

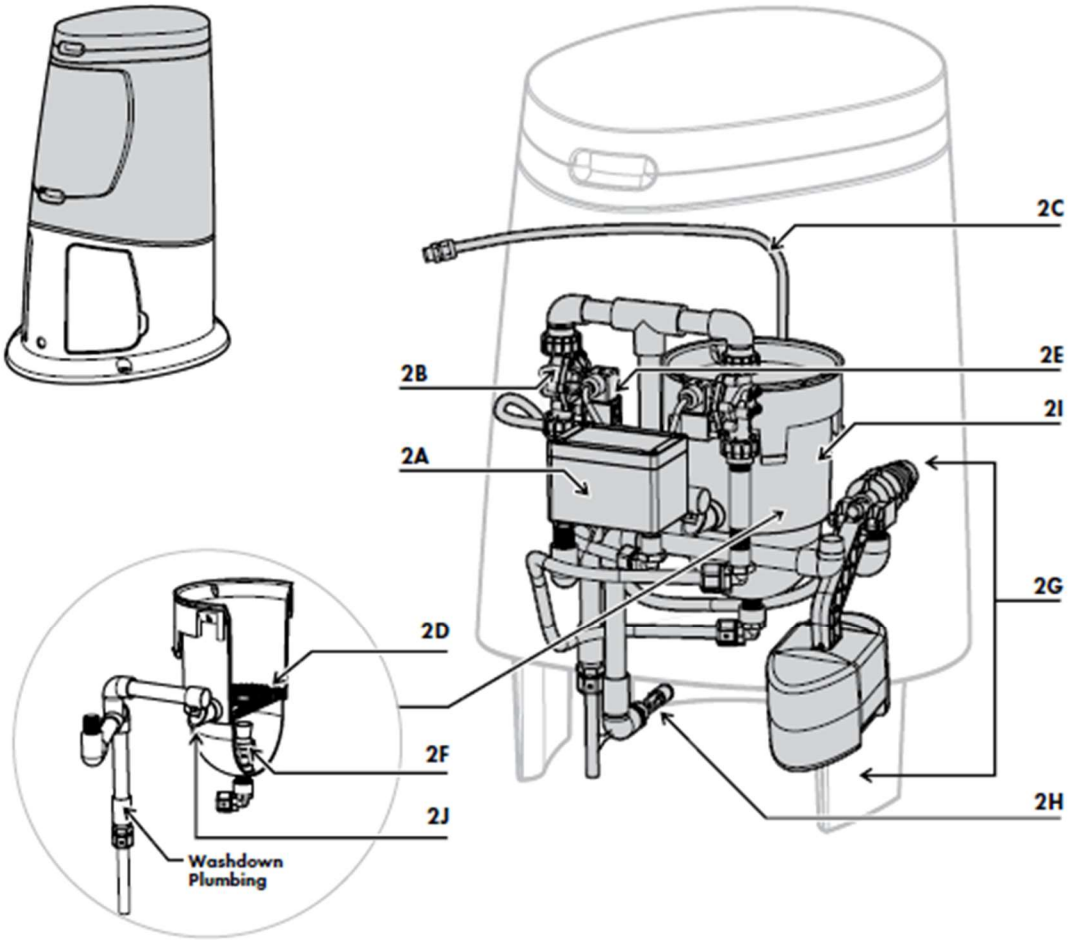

No	Description	Part Number
2: HOPPER INTERIOR COMPONENTS		
2A	Junction Box	8000136
2B	Solenoid Valve	206034
2C	Junction Box Cable (Comes with Junction Box)	N/A
2D	Grid Basket	73220
2E	DIN Cables	73261
2F	Chlorinator, HCE Nozzle	73085
2G	Emergency Shutoff Valve	73241
2H	High Level Switch	79840
2I	HCE Bowl	73219
2J	¾" HCE Bowl discharge drain, 45° cut	N/A

All trademarks belong to Solenis or its affiliates or to their respective third party owners. Review and follow all product safety instructions. All product information corresponds to Solenis' knowledge on the subject at the date of publication, but Solenis makes no warranty as to its accuracy or completeness and assumes no obligation to update it. Product information is intended for use by recipients experienced and knowledgeable in the field, who are capable of and responsible for independently determining the suitability thereof for intended uses and to ensure their compliance with applicable law. Proper use of this information is the sole responsibility of the recipient. Information provided by Solenis is not intended and should not be construed as a license to operate under or a recommendation to infringe any patent or other intellectual property right. No claims are made herein for any specific intermediate or end-use application. ©2022 Solenis

New Wiring Schematic – 115 VAC Control Box

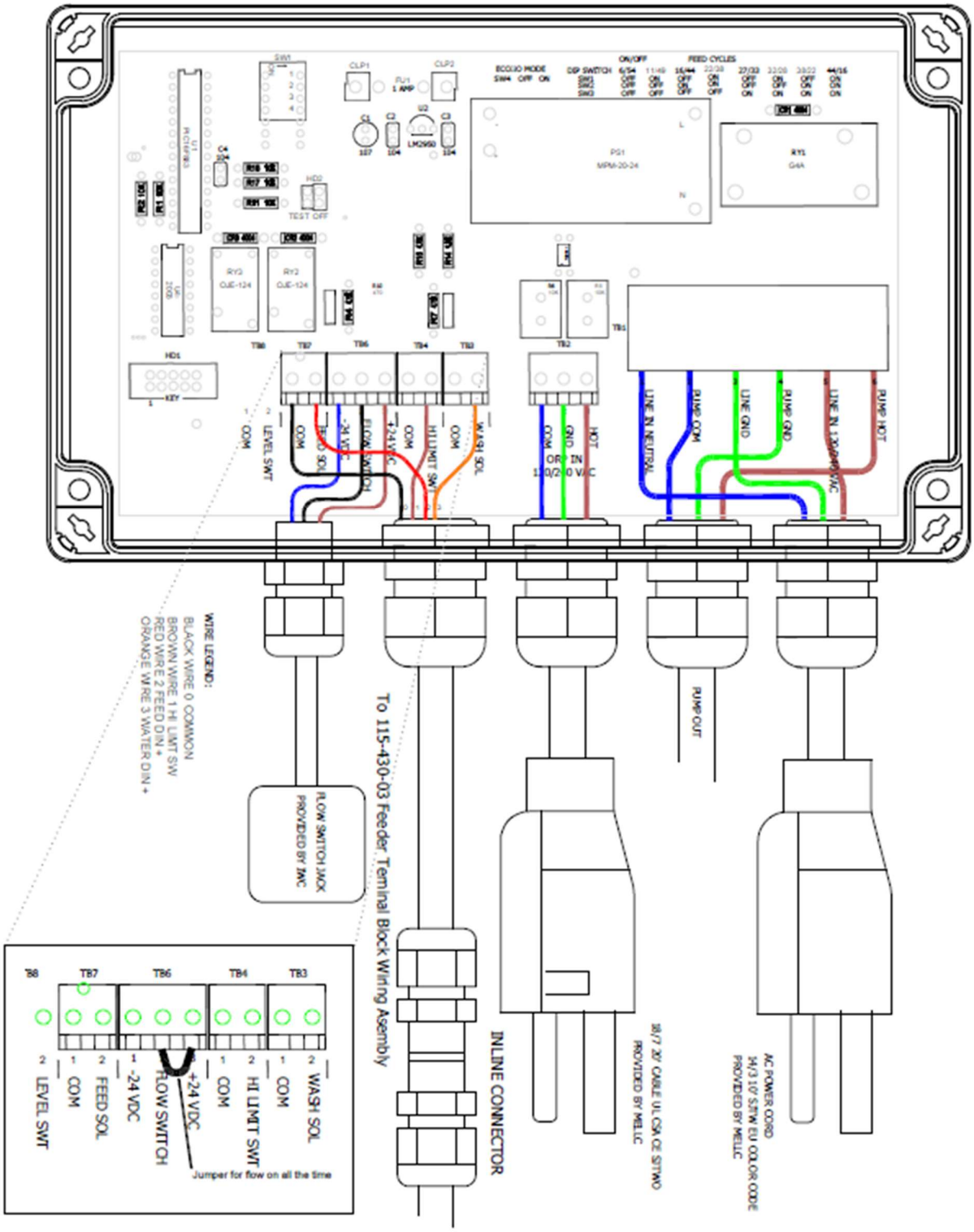

Note: Ensure there is flow in pool pipe prior to bypassing flow switch.

All trademarks belong to Solenis or its affiliates or to their respective third party owners. Review and follow all product safety instructions. All product information corresponds to Solenis' knowledge on the subject at the date of publication, but Solenis makes no warranty as to its accuracy or completeness and assumes no obligation to update it. Product information is intended for use by recipients experienced and knowledgeable in the field, who are capable of and responsible for independently determining the suitability thereof for intended uses and to ensure their compliance with applicable law. Proper use of this information is the sole responsibility of the recipient. Information provided by Solenis is not intended and should not be construed as a license to operate under or a recommendation to infringe any patent or other intellectual property right. No claims are made herein for any specific intermediate or end-use application. ©2022 Solenis

New Wiring Schematic – 230 VAC Control Box

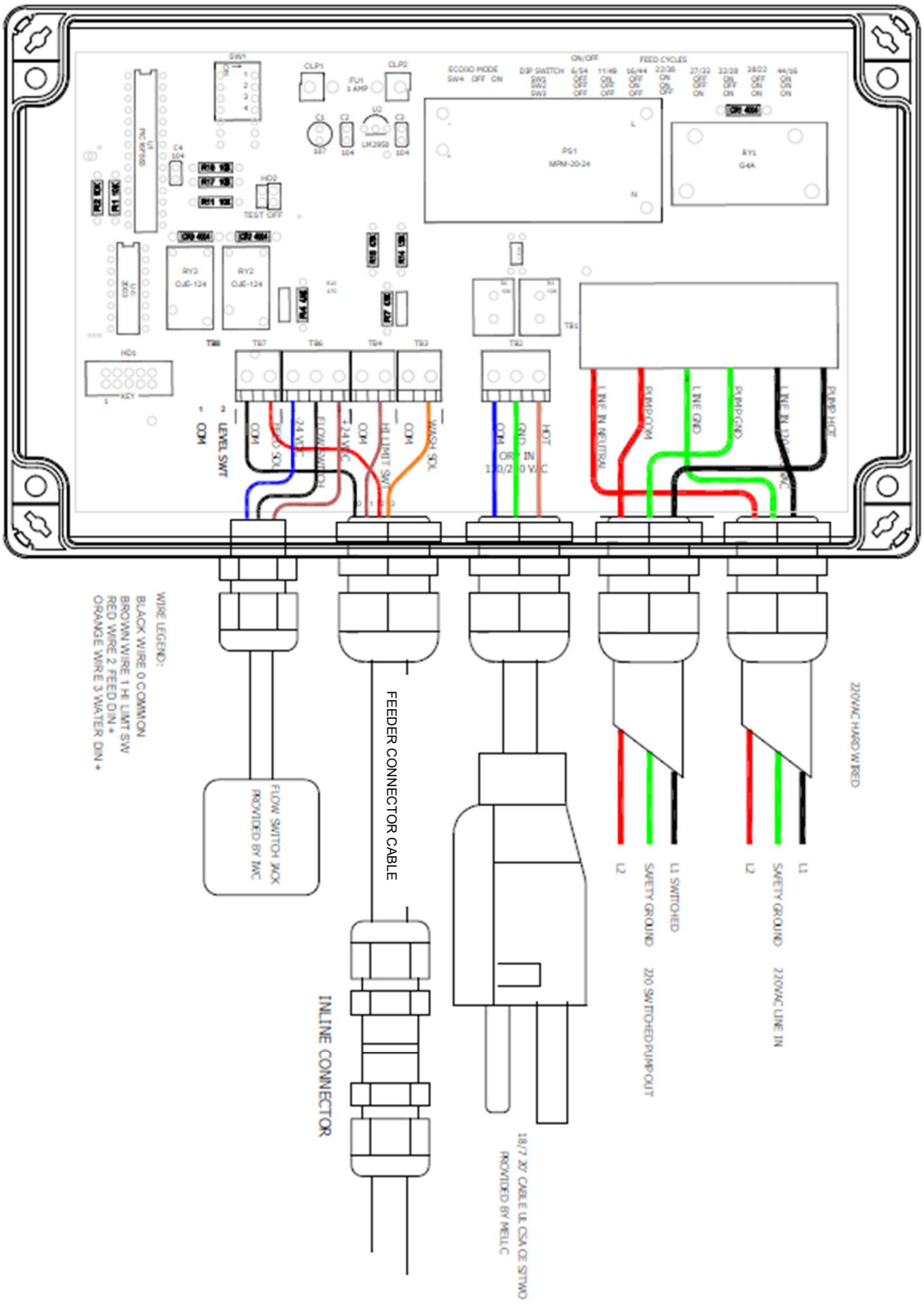

All trademarks belong to Solenis or its affiliates or to their respective third party owners. Review and follow all product safety instructions. All product information corresponds to Solenis' knowledge on the subject at the date of publication, but Solenis makes no warranty as to its accuracy or completeness and assumes no obligation to update it. Product information is intended for use by recipients experienced and knowledgeable in the field, who are capable of and responsible for independently determining the suitability thereof for intended uses and to ensure their compliance with applicable law. Proper use of this information is the sole responsibility of the recipient. Information provided by Solenis is not intended and should not be construed as a license to operate under or a recommendation to infringe any patent or other intellectual property right. No claims are made herein for any specific intermediate or end-use application. ©2022 Solenis

New Wiring Schematic - Feeder Junction Box

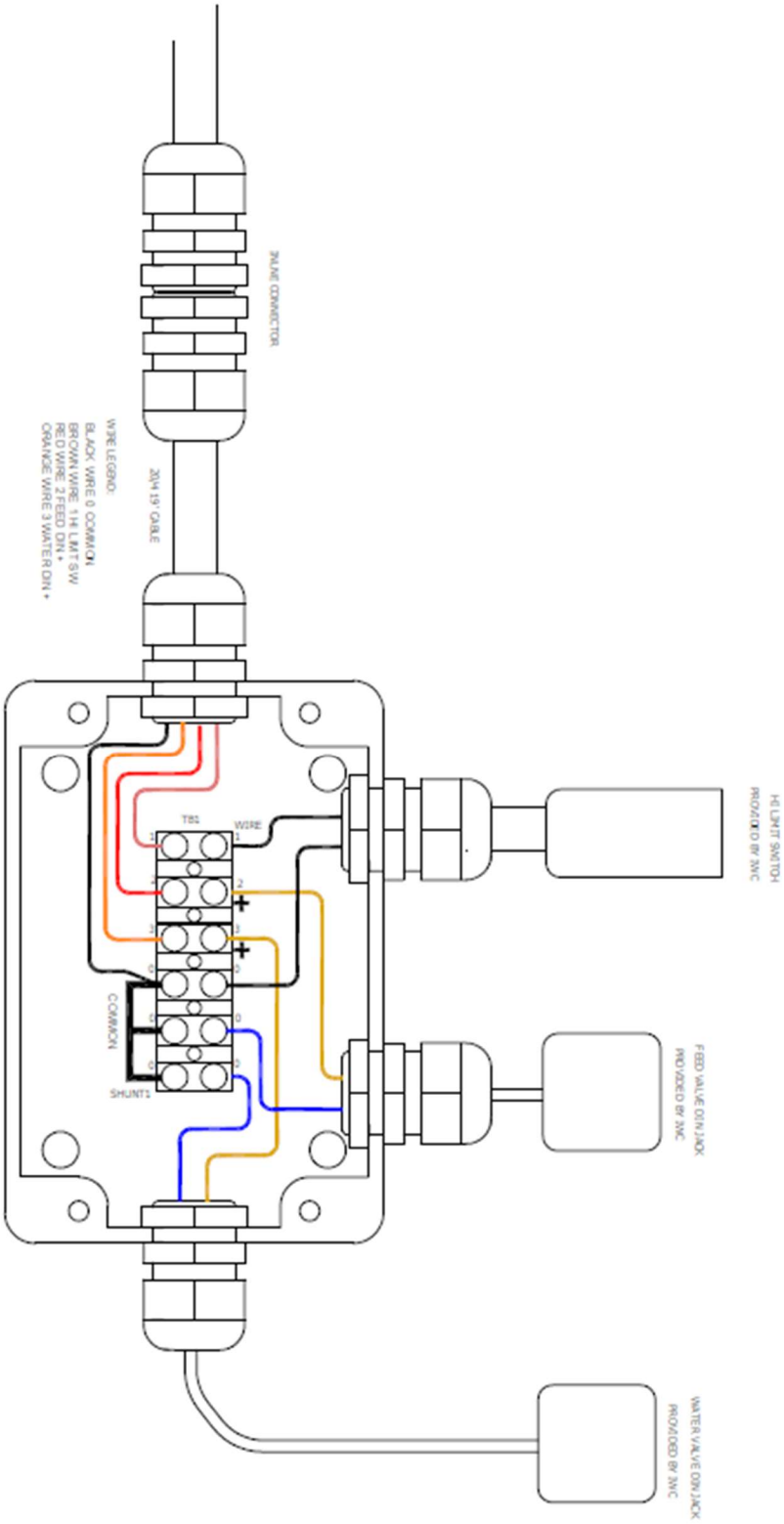

Solenis • 2475 Pinnacle Drive • Wilmington, DE 19803 • 1-800-478-5727 • www.cchpoolcare.com

All trademarks belong to Solenis or its affiliates or to their respective third party owners. Review and follow all product safety instructions. All product information corresponds to Solenis' knowledge on the subject at the date of publication, but Solenis makes no warranty as to its accuracy or completeness and assumes no obligation to update it. Product information is intended for use by recipients experienced and knowledgeable in the field, who are capable of and responsible for independently determining the suitability thereof for intended uses and to ensure their compliance with applicable law. Proper use of this information is the sole responsibility of the recipient. Information provided by Solenis is not intended and should not be construed as a license to operate under or a recommendation to infringe any patent or other intellectual property right. No claims are made herein for any specific intermediate or end-use application. ©2022 Solenis